UNIT-II - Motherboard and SMPS

Q.1 Define the motherboard and state its types.

Ans. A motherboard (sometimes alternatively known as the main board, system board, planar board or logic board or colloquially, a mobo) is the main printed circuit board (PCB) found in computers and other expandable systems. It holds many of the crucial electronic components of the system, such as the central processing unit (CPU) and memory, and provides connectors for other peripherals. Unlike a backplane, a motherboard contains significant subsystems such as the processor and other components.

TYPE OF MOTHERBOARD

1. Non-Integrated Motherboards

Non-integrated Motherboards have assemblies such as the I/O port connectors (serial and parallel ports), hard drive connectors, floppy controllers and connectors, joystick connections etc installed as expansion boards. This takes up one or more of the motherboard's expansion slots and reduces the amount of free space inside the computer case. Most of the older motherboards were Non-Integrated. Some of the later system boards began to integrate some of these assemblies right onto the circuit board.

2. Integrated Motherboards

Integrated Motherboards have assemblies that are otherwise installed as expansion boards, integrated or built right onto the board. The serial and parallel ports, the IDE and floppy drive, and joystick all connect directly to the motherboard. This is now standard on any latest model 486 and above. It tends to free up some space inside the case and allows for better accessibility and airflow.

3. Embedded Motherboard

In an effort to reduce the cost (and size) of a computer system even more, manufacturers began integrating (or embedding) technologies such as video, sound, networking and modems right onto the system board. This dramatically increases the cost of the main board but reduces the cost of the overall system.

VPMP POLYTECHNIC

Q-2 Draw the layout of the motherboard and explain the components mounted on it.

Ans. Layout Of motherboard : -

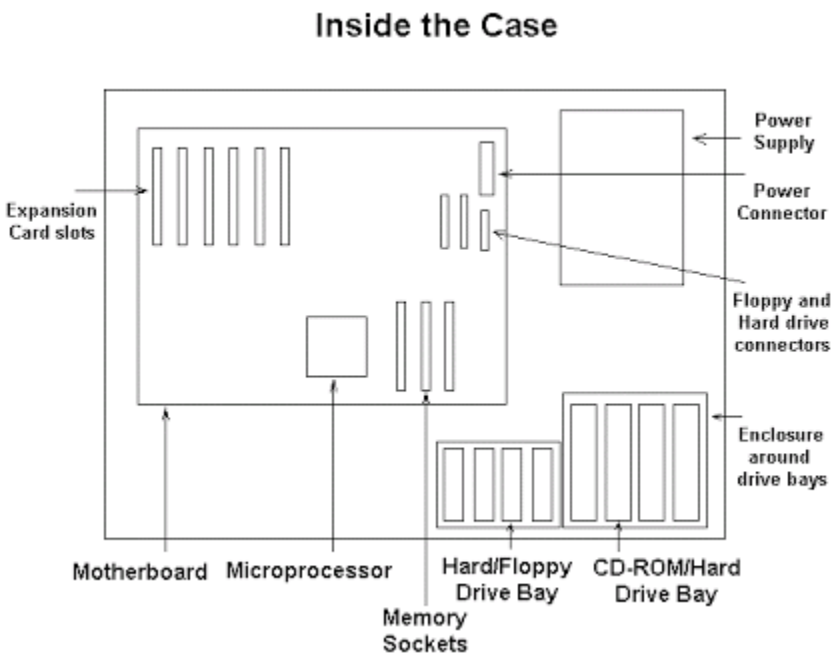

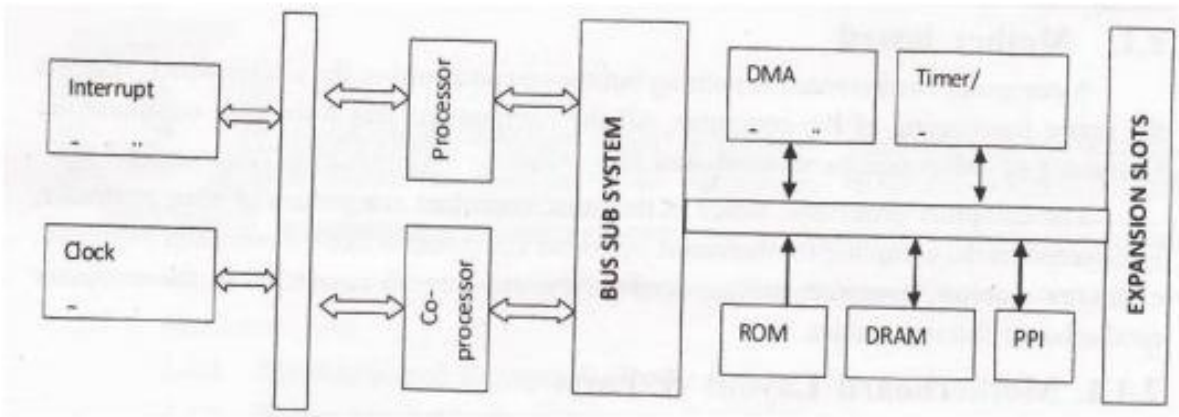

Block diagram of Motherboard

Components of motherboard are following :-

- Processor
- Co – processor
- Clock – generator
- Bus subsystem
- Interrupt controller
- ROM and RAM logic
- DMA controller
- Timer/counter logic
- Peripheral interface logic

Processor

- The processing unit of a computer is the component which processes all those zeros and ones.
- The higher the processing speed the faster the system runs .
- The processor is a single IC containing sophisticated circuits that allow it to perform arithmetic functions.
- It contains 2 main sections : 1) EU(execution Unit) and 2)BIU(Bus Interface Unit)
- The EU is the part that carries out the instructions
- The BIU is used to transfer the data between the microprocessor and other circuits.

Co – Processor

- The co-processor is an optional plug-in component on the motherboard.
- It can make a computer run 5 to 10 times faster in some operation.
- The processor works in conjunction with the coprocessor when it is operating in maximum mode.

Clock- Generator

- Computer uses Clock logic
- These logic elements are designed to operate synchronously.
- This synchronous operation helps the machine keep track of every bit that it can process.
- These timing controls are generated by clock generator's logic.

Bus Subsystem

- The bus controller generated the signal to control address latch, the direction control signal for the data bus transfer and also signals for memory read, memory write, I/O read and I/O write.

Interrupt Controller

- Interrupts are generated to capture the processor's attention and temporarily divert it to a different process.
- It handles 8 maskable interrupts.
- The non-maskable interrupts generate the NMI signals.
- It is generated on detection of :
    1. RAM parity error in motherboard.
    2. RAM parity error in the daughter board which has the RAM as expansion memory.

VPMP POLYTECHNIC

3. Co – processor error, if a co-processor is installed.

RAM and ROM logic

- The ROM stored the POST (Power on Self-test) and BIOS.
- The use of dynamic RAM in PCs needs refreshing memory.

DMA Controller

- To speed up the system performance the main processor is to be relieved from time consuming jobs.
- The DMA handles these tasks separately.
- Once it receives instruction from the CPU, DMA takes the command and does all the memory transfer operation.

Timer/Counter Logic

- Time 0: It is used to interrupt the processor at the rate of 18.2 clock per sec.
- Time 1: It is used to generate DMA request signals for performing refresh cycles at every 15 microseconds.
- Time 2: It is used to generate various tones by the speaker.

PPI (Programmable Peripheral Interface)

- The PPI device connects the peripheral device to the computer system.
- It is designed to implement parallel I/O ports without the additional circuit.
- It is a very flexible parallel interface that is software controlled.

Q-3. COMPONENTS OF MOTHERBOARD

Ans.

1. Mouse & keyboard
2. USB
3. Parallel port
4. CPU Chip
5. RAM slots
6. Floppy controller
7. IDE controller
8. PCI slot
9. ISA slot
10. CMOS Battery
11. AGP slot
12. CPU slot

VPMP POLYTECHNIC

13. Power supply plug in

CPU(CENTRAL PROCESSING UNIT) - The CPU is centrally located on the motherboard. The data come from the RAM and the units such as keyboard, drives etc. After processing, the data is send back to RAM and/or the output units. The CPU receives at least two types of data: Instructions, which handle the other data and second one is User Data.

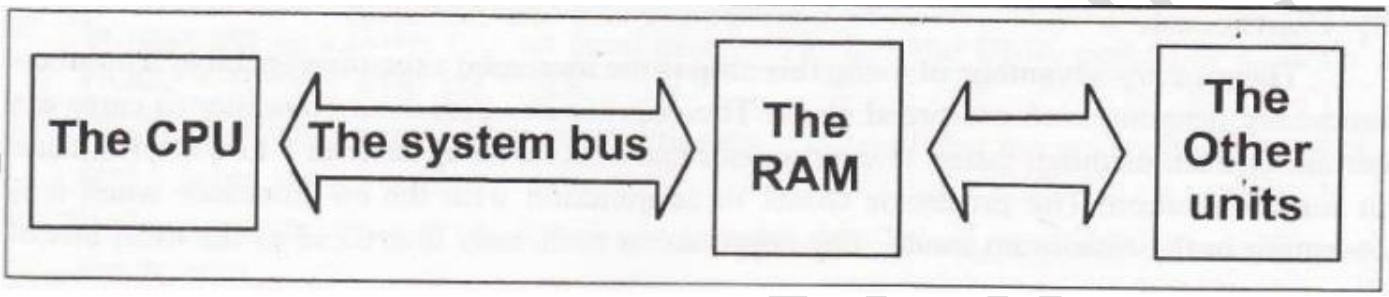

Six basic elements are used to gauge the performance and capability of a CPU design.

1. Speed The maximum number of clock cycles measured in MHz. The higher the speed, the quicker a command will be executed.

2. More switches means more computing power.

3. Registers The size (in bits) of the internal registers. The larger the registers. the more complicated the commands that can be processed in one step.

4. External data bus As data bus size increases, so does the amount and complexity of code (information) that can be transferred among all devices in the computer.

5. Address bus The size of the address bus determines the maximum amount of memory that can be addressed by the CPU

6. Internal cache The internal cache is high-speed memory built into the processor. This is a place to store frequently used data instead of sending it to slower devices (speed is relative in computers) such as RAM and hard disk drives.

Q-4. List various types of connectors on the motherboard and explain in detail.

Ans. Various types of connectors on motherboard are following:

- CPU socket
- Memory socket
- Hard Drive connectors
- Peripheral connectors
- Add – on card connectors
- Power connectors
- Case connectors
- Floppy drive connectors

CPU Socket

- The CPU socket is an array of hundreds of holes or metal plates to which a computer CPU connects.
- It supplies power to the processor and allows data to be sent to and from the processor from the computer's memory.

Memory Socket

- A motherboard of the older version has at least 2 sockets for RAM.
- When the processor needs instructions, it receives them from the RAM and when you save a document or file, it goes from the RAM to the hard disk.

Hard disk Connector

- Generally a motherboard has at least 2 hard drive connectors.
- Current motherboards use serial advanced technology attachment(SATA)hard drive connectors, which have L-shaped curves to ensure that cables are connected in the correct direction.
- Some motherboards have connectors for both SATA and IDE drives.

Peripheral Connectors

- Motherboards have connectors for different types of peripheral, usually located on the back of the computer case.
- The most common peripheral connection is USB connection.

Floppy Drive Connectors

- A floppy drive connector has two rows of 17 pins each.

VPMP POLYTECHNIC

Add-on Card connectors

- These connectors are long slots in which the cards are inserted. There are several types of add-on card connectors.
- Some of the most common include peripheral component interconnect express and AGP , used for video card and conventional PCI, used for other types of add on cards such as sound cards and storage controllers.

Power connectors

- Power connector is used to bring power from the computer's main power supply to all the computer's components.
- Today's computers have very high power requirements, some motherboards have additional ports for auxiliary power connectors.

Case Connectors

- The case connectors are used for status and power light on the front of the computer case, as well as the power button that turns the computer on.

Q-5. What is a motherboard? Explain various form factors of the motherboard.

Ans. A motherboard is a circuit board or circuit which controls the entire functioning of a computer.

- All the components that form your computer are connected to the motherboard.

Form Factors

- The dimension of a motherboard, also known as the Form Factor.

1. **AT**

- AT stands for 'Advanced Technology'.
- It was introduced in 1984 by IBM.
- Its maximum size is 12 x 11-13 inches.

2. **ATX**

- ATX stands for Advanced Technology extended.

VPMP POLYTECHNIC

- It was introduced in 1996 by Intel.
- Its maximum size is 12 x 9.6 inches.

3. **LPX**

- LPX stands for Low Profile Extended.
- It was introduced in 1980 by western Digital.
- Its maximum size is 9 x 11-13 inches.

4. **NLX**

- NLX stands for New low profile Extended.
- It was introduced in 1999 by Intel.
- Its maximum size is 8-9 x 10-13.6 inches.

5. **BTX**

- BTX stands for Balanced Technology Extended.
- It was introduced in 2004 by Intel.
- Its maximum size is 12.8 x 10.5 inches.
- One problem with ATX is removed by BTX is known as cooling.

Improved Design

- Heat processing components relocated to provide better coding.
- Heat processing components relocated to provide better cooling.
- Processor socket is mounted at a 45 degree angle to improve cooling.
- Horizontal fan is fitted over the processor for a better cooling option.

MOTHERBOARD FROM FACTOR

The ATX family of motherboards has dominated desktop computer designs since the late 1990s. ATX stands for "Advanced Technology Extended," and it replaced the AT and Baby-AT form factors developed in the mid 1980s for the IBM PC AT and its rivals.

Q-6. Write a short note on the chipset.

VPMP POLYTECHNIC

Ans. The specialized chips on a computer's motherboard or expansion card are called chipset.

- It is a set of intelligent controller chips.
- It includes a variety of other functions to make the PC designer's life easier.
- There are 2 types of chipset: 1) North Bridge and 2) South Bridge

North Bridge Chipset

- A north bridge is a microchip on some PC motherboards and is connected directly to the CPU and thus responsible for tasks that require the highest performance.
- It is usually paired with Southbridge, also known as an I/O controller hub.
- It typically handles communications among the CPU , in some cases RAM and PCS express video cards, and the Southbridge.
- Some Northbridge also contains integrated IDE controllers also known as a Graphics and Memory Controller Hub in Intel systems.

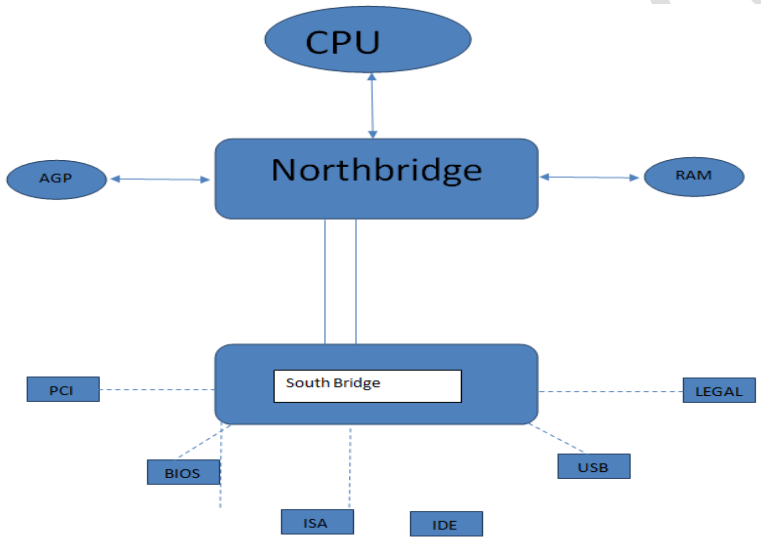

South Bridge chipset

- The south bridge typically implements the slower capabilities of the motherboard in a north/south bridge computer architecture.
- In Intel chipset systems, the south bridge is named Input/Output controller hub (ICH).
- It can usually be distinguished from the Northbridge by not being directly connected to the CPU.

- Through the use of controller integrated channel circuitry.
- A Southbridge can handle all computer I/O functions and IDE channels.

Q-7 Explain expansion buses?

Ans. EXPANSION BUSES

The expansion card (also expansion board, adapter card or accessory card) in computing is a printed circuit board that can be inserted into an electrical connector, or expansion slot on a computer motherboard, backplane or riser card to add functionality to a computer system via the expansion bus.

Type of Expansion Buses

1. ISA
2. MCA
3. EISA
4. VESA
5. PCI
6. IEEE1394
7. USB

Designers divided the external data bus into two parts:

System bus. This supports the CPU. RAM. And other motherboard components and runs at speeds that support the CPU. **Expansion bus.** This supports any add-on devices by means of the expansion slots and runs at a steady rate, based on the specific bus design.

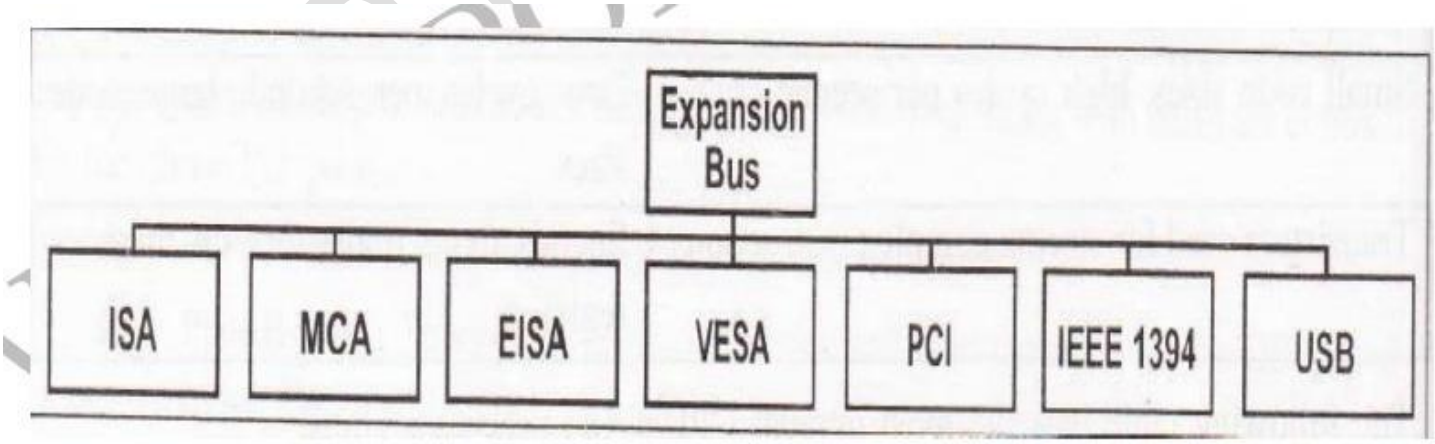

BUS STANDARDS

1.Bus Width - A bus is a channel over which information flows. The wider the bus the more information can flow over the channel. For example a wider highway can carry more cars than a narrow one.

2. Bus speed - The speed of the bus reflects how many bits of information can be sent across each wire per second. This would be analogous to how fast the car is driving on our analogical highway.

3. Bus Bandwidth - Bandwidth also called throughput, refers to the total amount of data that can theoretically be transferred on the bus in a given unit of time.

4. Bus Interfacing - On a system that has multiple buses, circuitry must be provided by the chipset to connect the buses and allow devices on one talk to devices on the other. This device is called a "bridge", the same name used to refer to a piece of networking hardware that connects two dissimilar networks.

5. Bus Mastering - On the higher-bandwidth buses, a great deal of information is flowing through the channel every second. Processor is required to control the transfer of this information. The processor is a "middleman" and it is far more efficient to "cut out" the middleman and perform the transfer directly. It is done by having capable devices take control of the bus and do the work themselves; devices that can do this are called bus masters.

Q-8. Explain BUS ORGANIZATION

Ans. 1. Processor Bus

2. Cache Bus

3. Memory Bus

4. Local I/O Bus

5. Standard I/O Bus

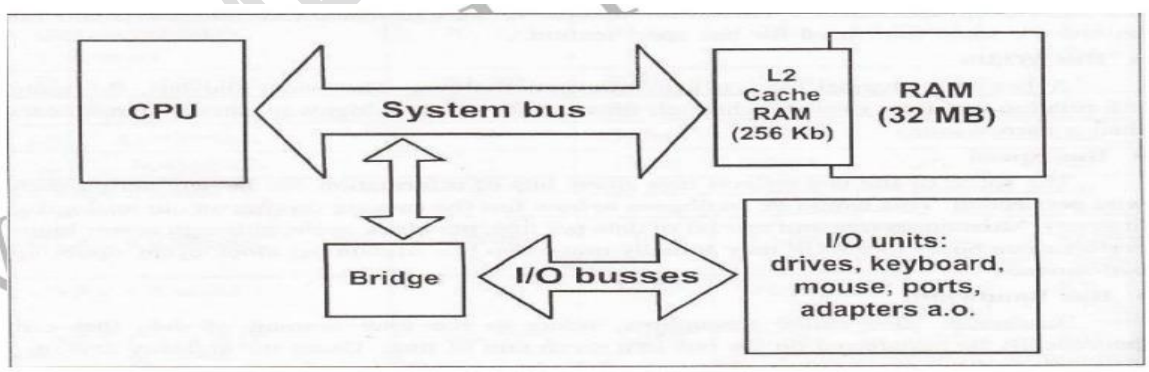

1.The Processor bus - This is the highest level bus that the chipset uses to send information to and from the processor.

2.The Cache Bus - Higher level architectures, such as those used by the Pentium Pro and Pentium II employ a dedicated bus for accessing the system cache. This is sometimes called a backside bus.

3.The Memory Bus - This is a second level system bus that connects the memory subsystem to the chipset and the processor. In some systems, the processor and the memory buses are the same thing.

4.The Local IO Bus - This is a high speed input/output bus used for connecting performance critical peripherals to the memory, chipset and processor. For example, video cards, disk storage devices, and high speed network interfaces generally use a bus of this sort. The two most common local IO buses are VESA local bus and PCI bus.

5.The Standard IO Bus - This bus is used for slower peripherals like mice, modems, regular sound cards, and low speed networking. It is also compatible with older devices.

Q-9 . EXPLAIN IN DETAIL INDUSTRY STANDARD ARCHITECTURE (ISA) BUS

Ans.

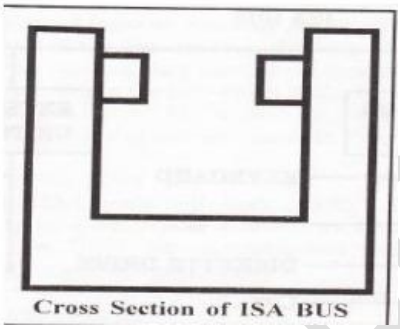

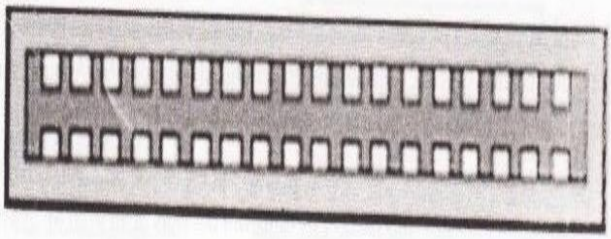

ISA stands for Industry Standard Architecture which is the most common bus in the PC world. The ISA bus still has the newest computers. Despite the fact that it is largely unchanged since it was expanded to 16 bits. The ISA bus eventually became narrow to performance and was enlarged with additional high- speed buses. There are still many devices for which the ISA's speed is more than sufficient (an example of standard moderns). The original ISA bus on the IBM PC was 8 bits wide, reflecting the 8 bit data width of the Intel 8088 processor's system bus, and ran at 4.77 MHz. With the speed of the first 8088s. The IBM AT was introduced which used the Intel 80286. The ISA bus provides reasonable throughput for low bandwidth devices and virtually assures compatibility with almost every PC on the market.

VPMP POLYTECHNIC

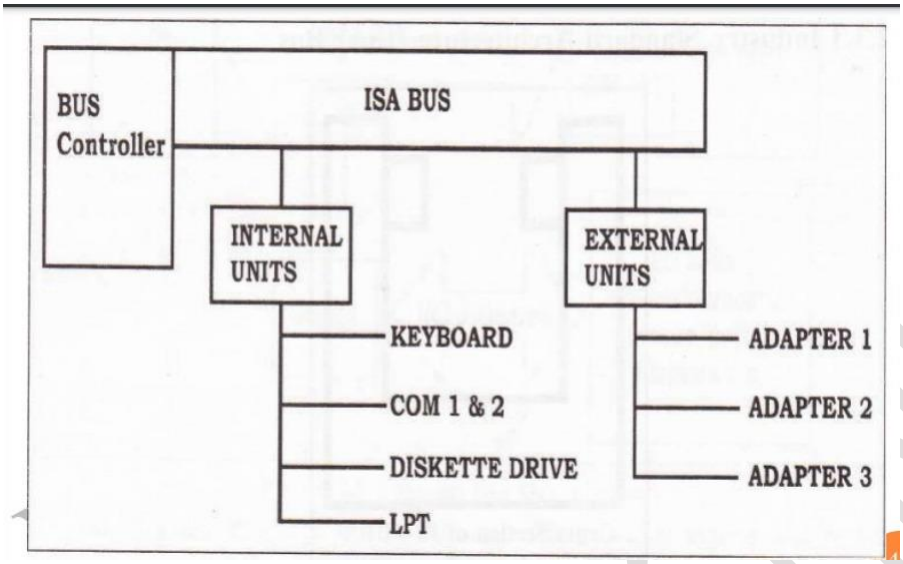

Q-10. Explain in detail Peripheral Component Interconnect (PCl) Local Bus

Ans. The most popular local I/O bus, the Peripheral Component Interconnect (PCI) bus was developed by Intel and introduced in 1993.

- PCI Bus performance-The PCI bus provides superior performance to the VESA local bus. It is geared specifically to fifth and sixth generation systems, although the latest generation 486 motherboards use PCI as well.
- PCI allows developers to design cards that will work in any PCI-compatible machine.
- It overcomes the limitations of ISA, EISA, MCA, and VLB. And it offers the performance needed for today's fast systems.
- There are many similarities between PCI and the older VLB specifications.
- Both are local bus systems with 32-bit data paths and burst modes. Also, The original PCI design operates at 33 MHz roughly the same speed as the VLB.

PCI is the higher performance than general I/O bus currently used in PCs. This is clue to several factors:

Burst Mode: The PCI bus can transfer information in a burst mode.

Bus Mastering: PCI supports full bus mastering. which leads to improved performance.

High Bandwidth Options: The PCI bus specification version 2.1 calls for expandability to 64 bits and 66 MHz speed; if implemented this would quadruple bandwidth over the current design.

PCI Expansion Slots- The PCI bus offers more expansion slots than most VLB implementations.

Most PCI systems support 3 or 4 PCI slots. Also, the PCI bus offers a great variety of expansion

VPMP POLYTECHNIC

cards compared to VLB. The most commonly found cards are video cards, high-speed networking cards. Hard disk drives are also on the PCI bus but are normally connected directly to the motherboard on a PCI system.

PCI Internal Interrupts- The PCI bus uses its own internal interrupt system for dealing with requests from the cards on the bus.

PCI Plug and Play- PCI systems were the first to popularize the use of Plug and Play. The PCI bus is part of the Plug and Play standard developed by Intel with cooperation from Microsoft and many other companies. The PCI chipset circuitry handles the identification of cards and works with the operating system and BIOS to automatically set resource allocations for compatible peripheral cards.

Q-11 . Explain in detail Accelerated Graphics Port

Ans.

- In the early days of PCI, the major market for that technology was the high performance display adapter.
- Today, the PCI market includes NICs, sound cards, Ultra Direct Memory Access (UDMA) controllers, and DVD (digital video disc) interfaces.
- The variety of devices posed a problem for display-card designers: Having more cards on a single bus slowed down the performance, just when the increasing popularity of 24-bit graphics and 3D rendering called for greater demands on the display system.
- The search was on for yet another interface; this time, the solution was a single slot tuned for the display adapter. Once again, Intel led the way and developed the Accelerated Graphics port (AGP).
- The AGP removes all the display data traffic from the PCI bus and gives that traffic its own 525-MB-per-second pipe into the system's chip set and, from there, straight to the CPU. It also provides a direct path to the system memory for handling graphics. This procedure is referred to as
- Direct Memory Execute (DIME). AGP connectors are found only on Pentium Il-based and later computers or on similar CPUs from non-Intel vendors.

Q-12. EXPLAIN IN DETAIL VESA LOCAL BUS (VLB)

Ans.

VPMP POLYTECHNIC

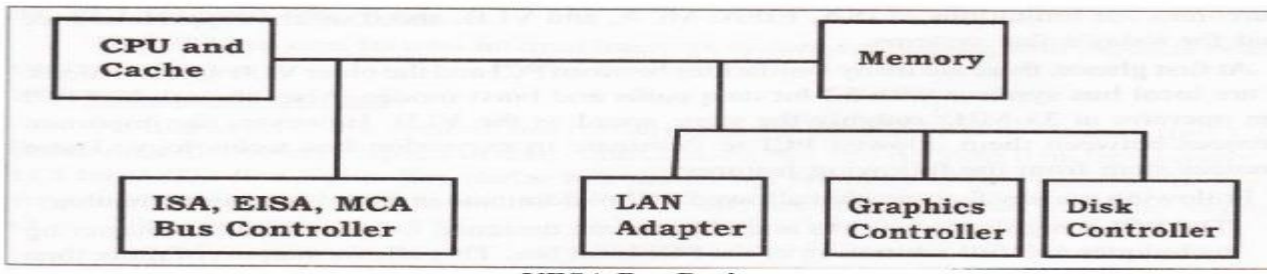

VESA Bus Design

VESA stands for the Video Electronics Standards Association, a standards group that was formed

to address video-related issues in personal computers. This is the first local bus to gain popularity. The VESA local bus (also called VL-Bus or VLB for short) was introduced in 1992. The major reason for the development of VESA or VLB was to improve video performance in PCs. It is an extension of the ISA bus, an ISA card can be used in a VLB slot.

There were also several key problems with the VLB implementation.

1) The design was strongly based on the 486 processor. And adapting it to the Pentium caused a host of compatibility and other problems.

2) The bus itself was tricky electrically; for example, the number of cards that could be used on the bus was low (often only two or even one), and occasionally there could be timing problems on the bus when more than one card was used.

3) The bus did not support bus mastering properly since there was no good arbitration scheme, and did not support Plug and Play.

Q-13. Explain in detail IEEE 1394 FireWire High-Performance Serial Interface.

Ans. IEEE 1394, known also by its Apple trade name of FireWire.

- While connecting external peripheral, IEEE 1394 has been a possible replacement of SCSI.
- This high-speed serial interface allows up to 62 devices on a chain, at data transfer rates of up to 50 MB per second.
- This new interface offers several advantages: a hot swap capability (the ability to add and remove components while the machine is running), small and inexpensive connectors, and a simple cable design.
- Right now, few devices support1394, but it is seen as a viable method for connecting multimedia devices like camcorders and other consumer electronic devices to PCs.

VPMP POLYTECHNIC

Q-14. Explain the block diagram of SMPS.

Ans. The disadvantages of LPS such as lower efficiency, the need for large value of capacitors to reduce ripples and heavy and costly transformers etc. are overcome by the implementation of Switched Mode Power Supplies.

The working of SMPS is simply understood by knowing that the transistor used in LPS is used to control the voltage drop while the transistor in SMPS is used as a controlled switch.

Working

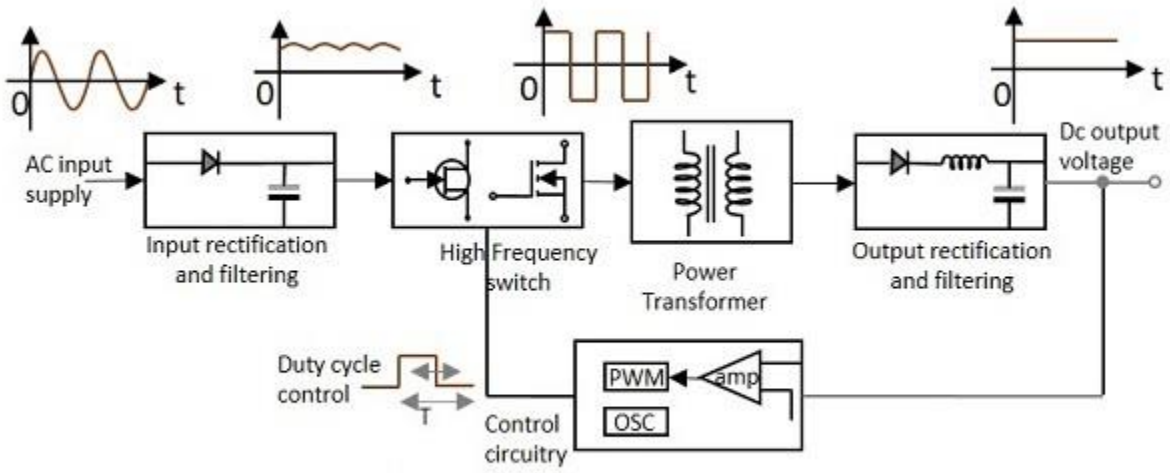

Functional block diagram of SMPS

The SMPS is mostly used where switching of voltages is not at all a problem and where efficiency of the system really matters. There are few points which are to be noted regarding SMPS. They are

- SMPS circuit is operated by switching and hence the voltages vary continuously.
- The switching device is operated in saturation or cut off mode.
- The output voltage is controlled by the switching time of the feedback circuitry.
- Switching time is adjusted by adjusting the duty cycle.
- The efficiency of SMPS is high because, instead of dissipating excess power as heat, it continuously switches its input to control the output.

Disadvantages

- The noise is present due to high frequency switching.
- The circuit is complex.
- It produces electromagnetic interference.

Advantages

- The efficiency is as high as 80 to 90%
- Less heat generation; less power wastage.
- Reduced harmonic feedback into the supply mains.
- The device is compact and small in size.

- The manufacturing cost is reduced.
- Provision for providing the required number of voltages.

Applications

There are many applications of SMPS. They are used in the motherboard of computers, mobile phone chargers, HVDC measurements, battery chargers, central power distribution, motor vehicles, consumer electronics, laptops, security systems, space stations, etc.

Q-15. Explain the connectors of SMPS.

Ans.

Power-IN.

The power-IN connector as shown in the figure is the input for the MAINS supply. A power cable is inserted here, the other end of which is connected to the main supply. The input supply gets converted to DC supply.

Power-OUT.

The power-OUT connector is connected directly to the Power-IN connector from inside the supply unit. It supplies the same AC supply that is fed to the power-IN socket. The power-OUT connector is used to give supply to monitors or any display unit.

FAN.

If you look at the back side of Computer-SMPS, you will find a FAN on the right side. The FAN as you can see blows the air out and is only used to dissipate the internal heat from the SMPS since the switching is done at high frequencies which creates a lot of heat inside.

ATX connector.

As you can see in the image, it is a 24-pin female connector that is used to supply DC supply to the motherboards. Various color-coded wires connect to this connector and each colored wire supplies a distinct DC voltage which is explained in the chart below.

Wire color – Voltage
Red - +5 V
Yellow – +12V
Black - Ground
Blue – -12V
Grey – Power Good
Green – Power ON
Purple - +5V StandBy
Orange - +3.3V
Brown/Orange - +3.3V Sense
White - -5V (optional)

ATX-12V connector.

The Latest SMPS power supplies are accompanied by an extra 4-pin connector which supplies 12 volts to energize the central processing unit and other components of the motherboard.

AT Connectors.

Earlier motherboards were used to support AT connectors(6-pin each) also called P8 and P9 connectors to supply power to these motherboards(up to 486 boards).

Wire Colour	DC Voltage
Red	+5V
White	-5V
Black	Ground or 0V
Blue	-12V
Yellow	+12V
Orange	+ 5V (PG)

4-PIN connectors.

There are multiple 4-pin connectors that draw out from the SPMS unit. These connectors are used to supply DC power to various peripherals of a computer like a floppy disk drive, hard disk drive, or DVD-writers.

VPMP POLYTECHNIC

Q-16. Explain the pin-assignments of SMPS.

Ans.

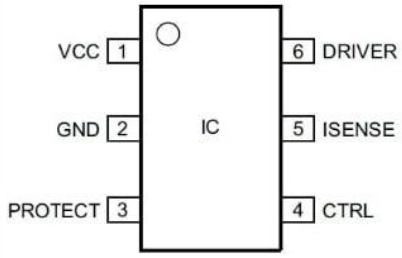

TEA1833TS pin configuration

Symbol	Pin	Description
VCC	1	supply voltage
GND	2	ground
PROTECT	3	protection and mains detect input
CTRL	4	control input
ISENSE	5	current sense and accurate OVP input
DRIVER	6	gate driver output

Pin description

Do more with less. It's a common directive, even when it comes to power supplies. Whether the assignment is to improve power density and keep costs down or to push even farther to make power supplies smaller, lighter and in line with stringent energy efficiency standards, it usually comes down to a trade-offs.

For example, one approach that IC designers have taken to meet power challenges is to move away from AC-DC controllers in 8-pin packages to smaller 6-pin options. Despite the power advantages, it's widely believed that moving from 8-pin to 6-pin controllers results in the loss of the protection functionality available on 8-pin solutions.

This and other vexing demands of power are no longer an issue with a move to NXP's next-generation TEA1833. This 6-pin controller, part of the acclaimed GreenChip family of power ICs, is a popular solution in medium power systems. The TEA1833 fixed frequency flyback controller enables compact and cost-efficient power supplies for designs up to 65 W. It also overcomes the potential function drawbacks of 6-pin designs and the challenges of the most demanding energy efficiency standards.

Knocking down the pins without losing protection

The TEA1833 comes in an industry-standard 6-pin TSOP6 (or SOT223-6) package. To ensure no functionality normally found on an 8-pin package is lost, the device employs pin functionality multiplexing.

- It offers integrated and accurate Over Voltage Protection (OVP) via the ISENSE pin and with Over Power Protection (OPP) the power supply can handle an overpower situation up to 200 % for a limited amount of time.
- Adjustable high/low line compensation is delivered by measuring the Bulk capacitor voltage via pin PROTECT while the offset is generated via pin ISENSE.
- Brown-in and brown-out function is offered via pin PROTECT while external Over Temperature Protection (OTP) and/or OVP can be easily implemented using a minimal number of external components.